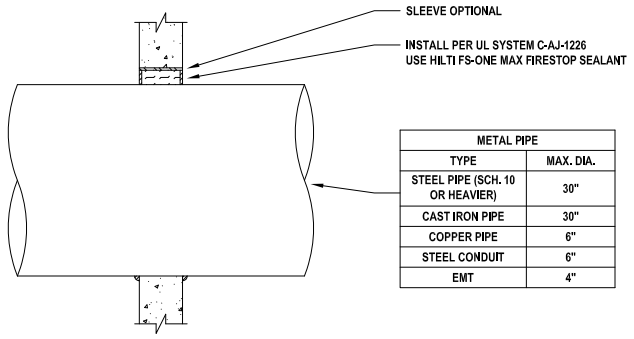

METAL PIPE	
TYPE	MAX. DIA.
STEEL PIPE (SCH. 10 OR HEAVIER)	30"
CAST IRON PIPE	30"
COPPER PIPE	6"
STEEL CONDUIT	6"
EMT	4"

1 / E.2.1 METAL PIPE THROUGH CONCRETE WALL (2-HR.)
NOT TO SCALE

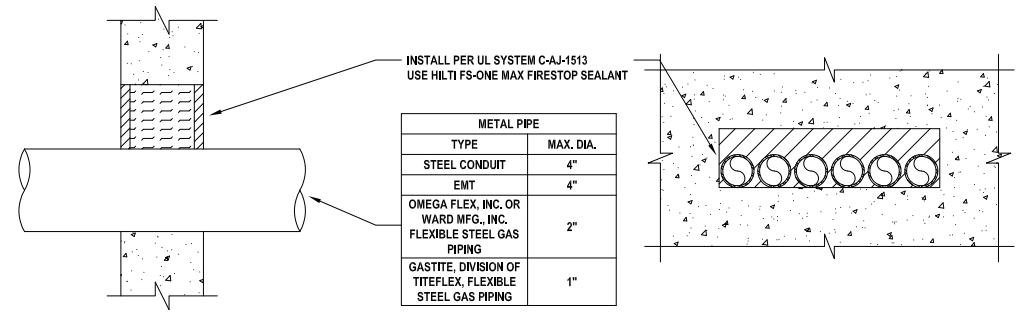

METAL PIPE	
TYPE	MAX. DIA.
STEEL CONDUIT	4"
EMT	4"
OMEGA FLEX, INC. OR WARD MFG., INC. FLEXIBLE STEEL GAS PIPING	2"
GASTITE, DIVISION OF TITEFLEX, FLEXIBLE STEEL GAS PIPING	1"

2 / E.2.1 MULTIPLE METAL PIPES THROUGH CONCRETE WALL (2-HR.)
NOT TO SCALE

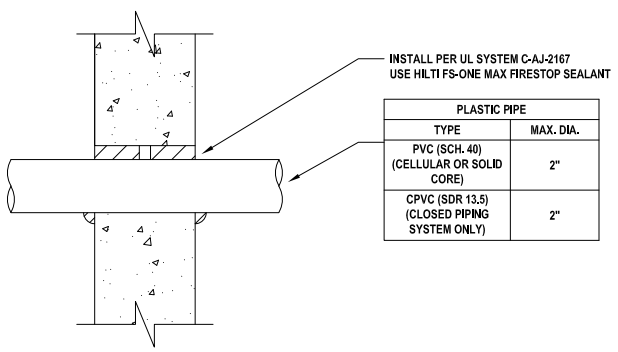

PLASTIC PIPE	
TYPE	MAX. DIA.
PVC (SCH. 40) (CELLULAR OR SOLID CORE)	2"
CPVC (SDR 13.5) (CLOSED PIPING SYSTEM ONLY)	2"

3 / E.2.1 PLASTIC PIPE THROUGH CONCRETE WALL (2-HR.)
NOT TO SCALE

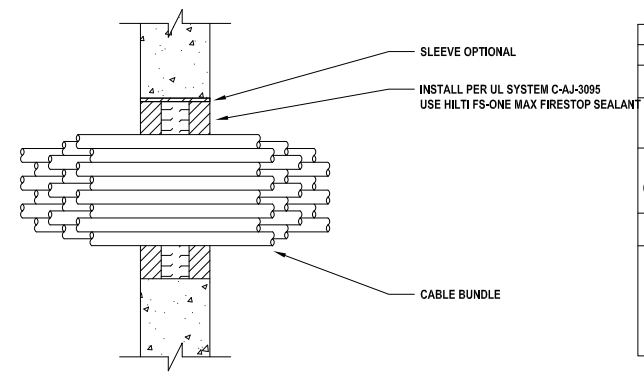

CABLE BUNDLE CONSISTS OF:			
TYPE	MAX.	TYPE	MAX.
TELEPHONE CABLE WITH PVC JACKET	300 PAIR NO. 24 AWG	METAL-CLAD CABLE	3/C NO. 12 AWG
POWER CABLE WITH PVC JACKET (COPPER CONDUCTOR)	500 KCMIL	COPPER CONDUCTOR SER CABLE WITH PVC JACKET	3/C (+GROUND) 2/0 AWG
POWER CABLE WITH PVC JACKET (ALUMINUM OR COPPER CONDUCTOR)	350 KCMIL	COAXIAL CABLE WITH FLUORINATED ETHYLENE JACKET	RG/U
POWER CABLE WITH PVC JACKET	7/C NO. 12 AWG	CABLE WITH PVC JACKET	3/C NO. 6 AWG
FIBER OPTIC CABLE (24 FIBER)	1/2" DIA.	SINGLE OR MULTIPLE CONDUCTOR TYPE MI CABLE (MIN. 1/8" SEPERATION BETWEEN MI CABLES AND ANY OTHER TYPES OF CABLE)	1-1/4" DIA.

4 / E.2.1 CABLE BUNDLE THROUGH CONCRETE WALL (2-HR.)
NOT TO SCALE

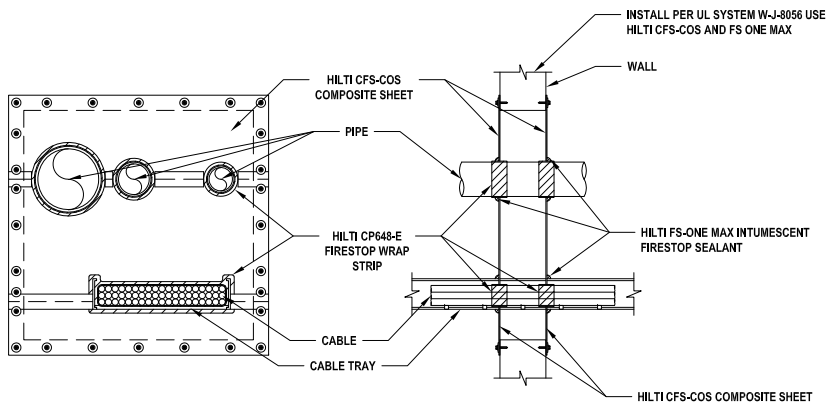

5 / E.2.1 CABLE BUNDLE THROUGH CONCRETE WALL (2-HR.)
NOT TO SCALE

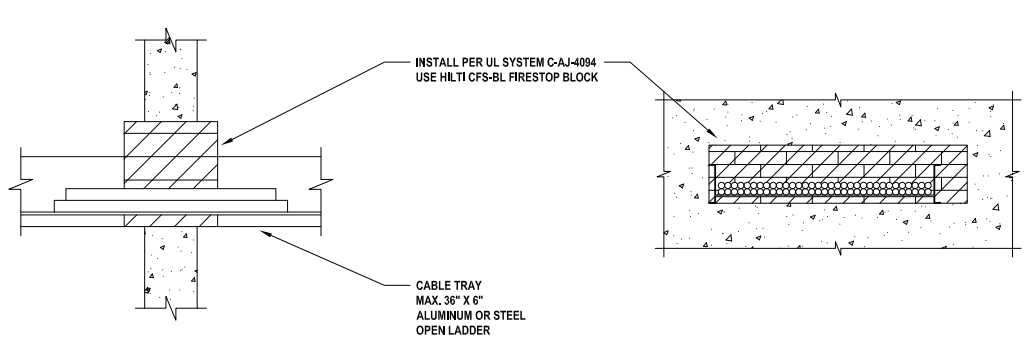

CABLE BUNDLE CONSISTS OF:			
TYPE	MAX.	TYPE	MAX.
TELEPHONE CABLE WITH PVC JACKET	300 PAIR NO. 24 AWG	METAL-CLAD CABLE	3/C NO. 12 AWG
SINGLE CONDUCTOR POWER CABLE WITH PVC JACKET	750 KCMIL	POWER CABLE WITH PVC JACKET	7/C NO. 12 AWG
FIBER OPTIC CABLE (24 FIBER) WITH PVC JACKET	1/2" DIA.		

6 / E.2.1 CABLE TRAY THROUGH CONCRETE WALL (2-HR.)
NOT TO SCALE

Notes:

1. *Refer to the following specifications for firestopping.*
   a. *Firestopping*
   b. *Penetration Firestopping*
   c. *Plumbing*
   d. *HVAC*
   e. *Electrical*
   f. *Communication*

   For Quality Control requirements, refer to the Quality Control portion of the specification.
2. *Details shown are typical details, containing general information only. Always refer to the full UL system detail for complete system requirements. If field conditions do not match requirements of details, approved alternate details shall be utilized. Design requirements, field conditions and dimensions need to be verified for compliance with the details, including but not limited to the following:*
   - *Fire Rating (F-Rating)*
   - *Temperature Rating (T-Rating)*
   - *Leakage Rating (L-Rating)*
   - *Water Rating (W-Rating)*
   - *Annular Space*
   - *Percent Fill*
   - *Movement*
   - *Type and thickness of fire-rated construction.*
3. *If alternate details matching the field conditions are not available, manufacturer's engineering judgment drawings are acceptable. Contact Hilti for alternative systems or Engineering Judgment. Drawings shall follow the International Firestop Council (IFC) Guidelines for Evaluating Firestop Systems Engineering Judgments.*
4. *References:*
   - *2013 Underwriter's Laboratories Fire Resistance Directory, Volumes 1 & 2*
   - *NFPA 101 Life Safety Code*
   - *NFPA 70 - National Electric Code*
   - *All governing local and regional building codes*
5. *Firestop System installation must meet requirements of ASTM E-814 (UL 1479) tested assemblies that provide a fire rating equal to that of construction being penetrated.*

<Notes to designer (delete this note after reading and replace with title block information)>
1. Any modification to these details could result in an application/system not meeting the UL or Intertek Classification or the intended temperature or fire ratings.
2. Details shown are up to date as of 2021.
3. For additional information on the details, refer to the most current "Underwriter's Laboratories Fire Resistance Directory (volume 2.)"

JOB NUMBER:

CHECKED:

ISSUE DATE:

REVISIONS:

CONTENTS:

ELECTRICAL PENETRATIONS CONCRETE/BLOCK WALL 2 HR.

SHEET NAME:

E.2.1

SHEET NUMBER: