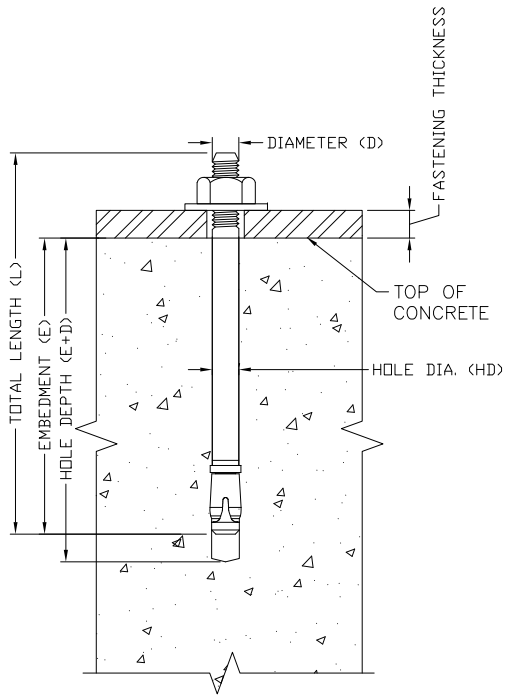

HILTI HSA
(UNCRACKED CONCRETE ONLY)

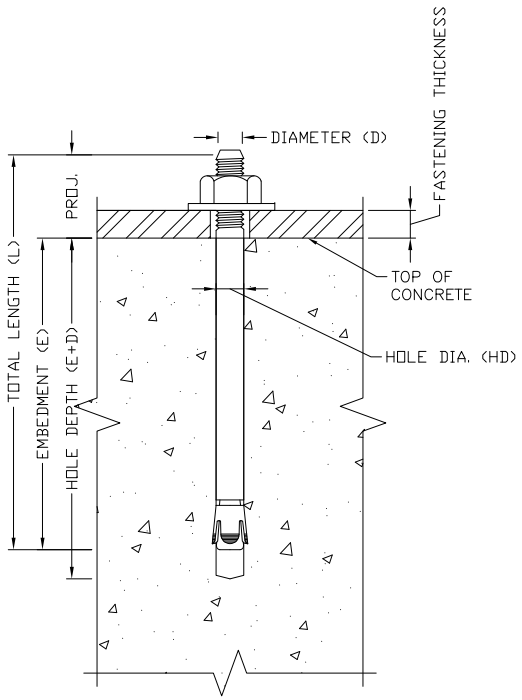

HILTI HST3
(SEE SCHEDULE)

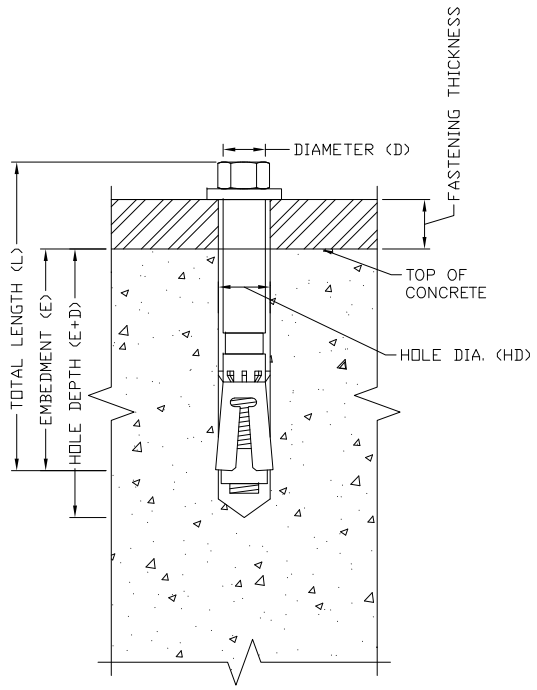

HILTI HSL-4
(SEE SCHEDULE)

GENERAL NOTES FOR POST-INSTALLED EXPANSION ANCHOR:

1. POST-INSTALLED EXPANSION ANCHOR CONNECTIONS SHALL BE DESIGNED AS PER EC2-4 OR ETAG NO. 001 ANNEX C AND EOTA TR 055 FOR STATIC/QUASI STATIC LOADS OR EOTA TR 045 FOR SEISMIC LOADS USING PRODUCTS WITH EUROPEAN TECHNICAL ASSESSMENT REPORT (ETA) WITH ASSUMED WORKING LIFE OF THE ANCHOR OF MINIMUM 50 YEARS. THE EXPANSION ANCHORS SHALL TESTED UNDER;

i. EUROPEAN TECHNICAL APPROVAL (ETA-11/0374) FOR HSA FOR DESIGN OF UNCRACKED CONCRETE CONDITION AND STATIC LOADS

ii. EUROPEAN TECHNICAL APPROVAL (ETA-98/0001) FOR HST3 FOR DESIGN OF CRACKED CONCRETE CONDITION OR/AND SEISMIC LOADS

iii. EUROPEAN TECHNICAL APPROVAL (ETA-19/0556) FOR HSL4 FOR DESIGN OF CRACKED CONCRETE CONDITION WITH FIRE CONSIDERATIONS OR/AND SEISMIC LOAD OR/AND FATIGUE

iv. CHARACTERISTIC RESISTANCE FOR CRACK AND/OR UNCRACK CONCRETE AND DISPLACEMENT

2. THE CONDITION OF CONCRETE FOR ITS SERVICE LIFE IS ASSUMED TO BE CRACKED AS PER EC2-4, UNLESS DETERMINED AND PROVEN. ANCHORS SUITABLE FOR CRACKED CONCRETE CONDITTION, I.E. HST3 OR HSL4 SHALL BE USED UNLESS PROVEN CONCRETE IS UNCRACKED.

3. ANCHOR CAPACITY USED IN DESIGN SHALL BE BASED ON THE TECHNICAL DATA PUBLISHED BY HILTI OR DETAILED CALCULATIONS AS APPROVED BY THE STRUCTURAL ENGINEER OF RECORD. SUBSTITUTION REQUESTS FOR ALTERNATE PRODUCTS MUST BE APPROVED IN WRITING BY THE STRUCTURAL ENGINEER OF RECORD PRIOR TO USE. CONTRACTOR SHALL PROVIDE CALCULATIONS DEMONSTRATING THAT THE SUBSTITUTED PRODUCT IS CAPABLE OF ACHIEVING THE PERFORMANCE VALUES OF THE SPECIFIED PRODUCT. SUBSTITUTIONS WILL BE EVALUATED BY THEIR HAVING AN ETA SHOWING COMPLIANCE WITH THE RELEVANT REQUIREMENTS.

4. CONTRACTOR MUST FOLLOW APPROVED METHOD FOR THE INSTALATION. METHOD STATEMENT MUST SUBMIT FOR APPROVAL BEFORE COMMENCEMENT OF WORK. ANCHOR MUST BE SET USING A CALIBRATED TORQUE WRENCH ACCORDING TO THE INSTALLATION TORQUE MOMENT OUTLINED IN THE ETA, OR ALTERNATIVELY, USING MACHINE TORQUEING, "AT SYSTEM" (UP TO M16)

5. TO ENSURE FAST AND RELIABLE INSTALLATION WITH AUTOMATIC HOLES CLEANING, SAFESET SYSTEM IS TO BE USED WITH HST3 OR HSL4

6. ANCHOR CAPACITY IS DEPENDENT UPON SPACING BETWEEN ADJACENT ANCHORS AND PROXIMITY OF ANCHORS TO EDGE OF CONCRETE. INSTALL ANCHORS IN ACCORDANCE WITH SPACING AND EDGE CLEARANCES INDICATED ON THE DRAWINGS.

7. POST-INSTALLED ANCHOR INSTALLATION SHALL BE PERFORMED BY PERSONNEL TRAINED TO INSTALL THE SYSTEM PER THE MANUFACTURER'S PRINTED INSTALLATION INSTRUCTIONS (MPII), AS INCLUDED IN THE MATERIAL PACKAGING. THE CONCTRACTOR SHALL ARRANGE FOR A MANUFACTURER'S REPRESENTATIVE TO PROVIDE ONSITE INSTALLATION TRAINING FOR POST-INSTALLED ANCHOR AND THE TRAINING RECORD MUST SUBMIT FOR APPROVAL.

8. CONTRACTOR IS ADVISED TO IDENTIFY OR TO LOCATE THE POSITION OF EXISTING REINFORCING BARS IN THE CONCRETE STRUCTURE PRIOR TO POST-INSTALLING ANCHORS. EXISTING BARS SHALL BE LOCATED USING HILTI FERROSCAN PS300 OR X-RAY OR CHIPPING OR OTHER MEANS.

9. MOCK UP TEST NEED TO DONE BEFORE COMMENCEMENT OF WORK. PULL OUT TESTING SHALL BE CARRY OUT FOR MINIMUM 5 POINTS OR 0.5% FOR TOTAL POST INSTALLED ANCHOR HAVE INSTALLED. PULL OUT TEST LOAD SHOULD FOLLOW DESIGN LOAD UNLESS OTHERWISE SPECIFIED.

CONTRACT NO	DWG NO	REV.	SCALE:

REFERENCE DRAWINGS

DWG NO	TITLE	DWG NO	TITLE

NO	REVISION	BY	CHK	APP	DATE	NO	REVISION	BY	CHK	APP	DATE

DRAWN: DATE:
CHECKED:
APPROVED:
APPROVED:

SEAL:

DWG TITLE